A3 DIMENSIONS IN MILLIMETRES UNLESS OTHERWISE STATED.

Heights in RED are from the layout datum level to the underside of the base of the trap ie. The bench height. This is taken when the throwing arm, extended to the front of the machine, is 150mm inside the inner front wall of the trap house in both cases.

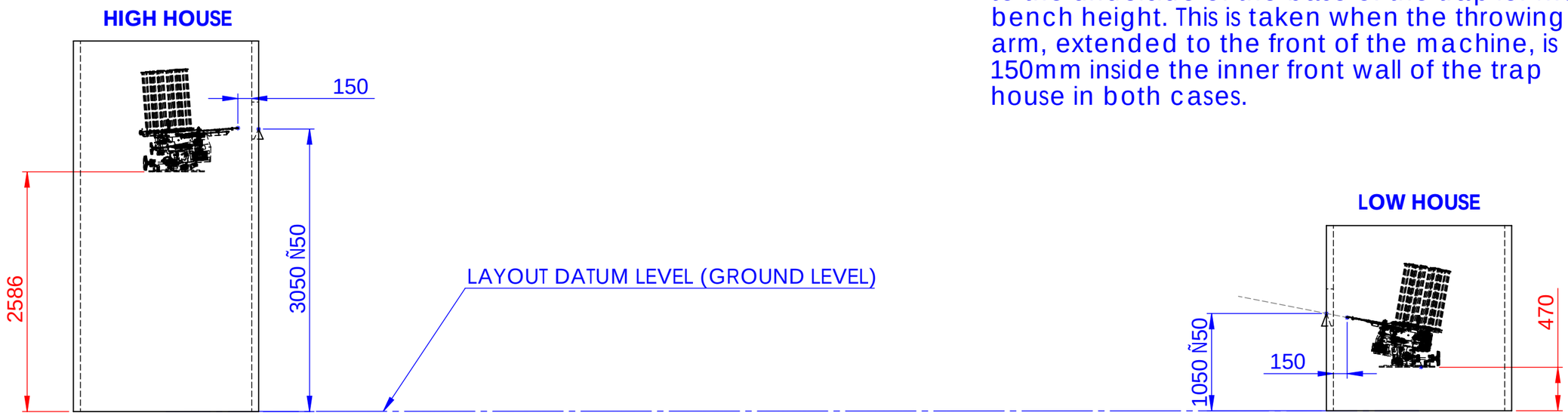

DETAIL A
SCALE 1 : 50

DETAIL B
SCALE 1 : 50

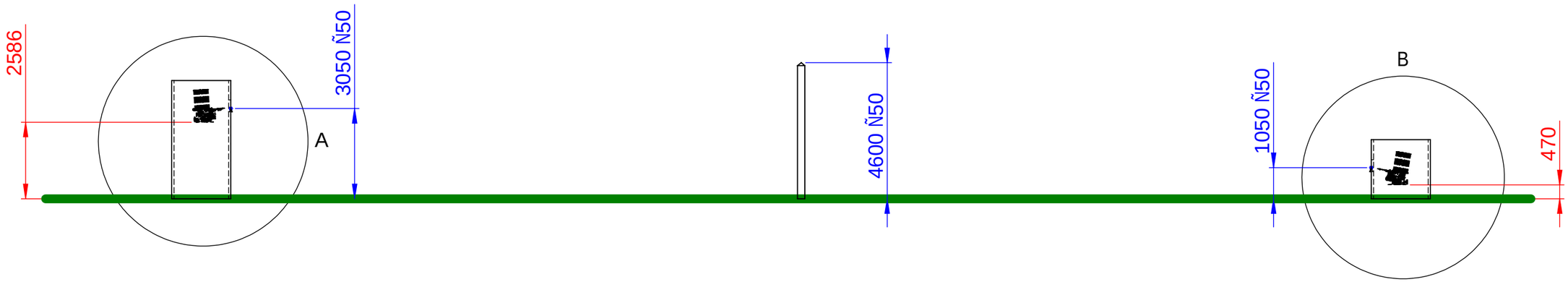

TOLERANCES (UNLESS OTHERWISE STATED)

MACHINED DETAILS

LINEAR DIMENSIONS: ± 0.5mm
EXTERNAL DIAMETERS: +0 -0.5mm
HOLES:

UP TO 10mm: +0.2mm -0
OVER ∅10 TO ∅30mm: +0.5mm -0
OVER ∅30: +1.0mm -0

ANGLES ±0.5°
SURFACE FINISH Ra 6.3εm

NON-MACHINED DETAILS

0 - 1000mm ± 1.0mm
1000 - 3000mm ±1.5mm
OVER 3000mm ±3mm

FABRICATED ASSEMBLIES

0 - 1000mm ± 1.5mm
1000 - 3000mm ±3mm
OVER 3000mm ±5mm

MODIFICATION	GRID REF.	MOD No	DRAWN BY:	CHECKED BY:	DATE	ISSUE
New Drawing - First Issue			AMH		14-01-2015	1

DO NOT SCALE
If unsure - Please ask

É **Promatic International Ltd.**
Station Works, Hooton Road
Hooton, South Wirral. CH66 7NF
Tel: +44 (0)151-327-2220

TITLE: SIGNATURE SKEET TRAP INSTALLATION

MATERIAL:

FINISH:

SCALE:	WEIGHT:	DRG No.	SHEET 1 OF 3
1:150	Kg	LAYOUT/SIGSK	

É Promatic International Ltd. This drawing is confidential and is supplied on condition that it is not used for any purpose other than that for which it was requested. Reproduction or communication of its content is prohibited without written authority from Promatic International Ltd.

ProM_A3L

A3 DIMENSIONS IN MILLIMETRES UNLESS OTHERWISE STATED.

HIGH HOUSE

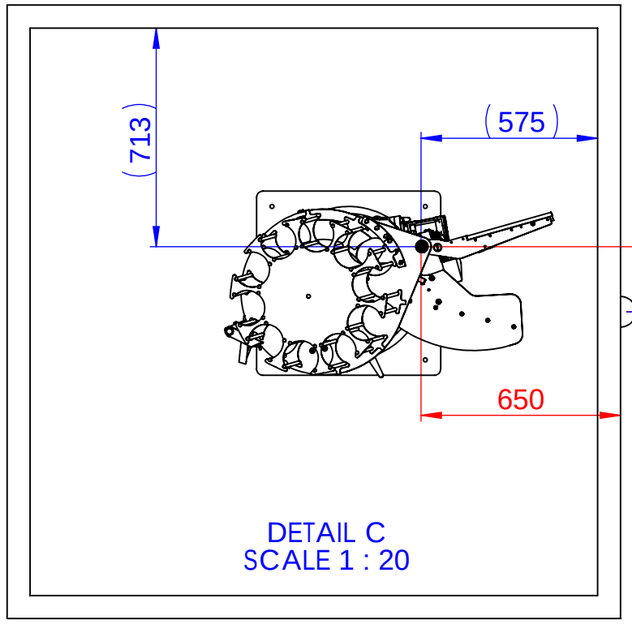

212

750

550

LOW HOUSE

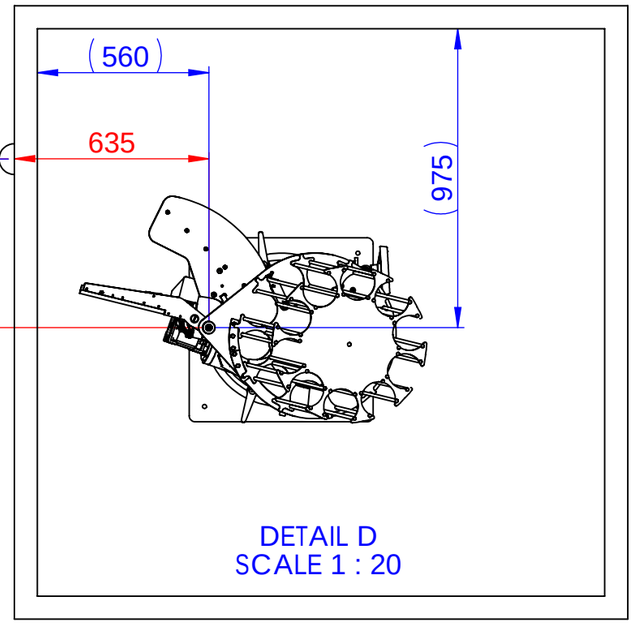

Dimensions in RED indicate the position of the trap taken from the point at which the clays emerge from the houses. The dimensions are taken to the centre of the top of the main shaft for ease of measurement in the field. These dimensions are given with the traps set to their theoretical elevations, adjustments will need to be made in order for the trap to meet the current ISSF requirements. The eventual position of the bases will vary depending on the exact trajectory of the clay from the trap. Adjustment of the backrail will alter this.
Dimensions in BLUE are taken to the inside walls of a 2m square trap house and are for reference only.
These dimensions are intended only as a guide to aid initial installation.

TOLERANCES (UNLESS OTHERWISE STATED)

MACHINED DETAILS

LINEAR DIMENSIONS: ± 0.5mm
EXTERNAL DIAMETERS: +0 -0.5mm
HOLES:

UP TO 10mm: +0.2mm -0
OVER ∅10 TO ∅30mm: +0.5mm -0
OVER ∅30: +1.0mm -0

ANGLES ±0.5°
SURFACE FINISH Ra 6.3εm

NON-MACHINED DETAILS

0 - 1000mm ± 1.0mm
1000 - 3000mm ±1.5mm
OVER 3000mm ±3mm

FABRICATED ASSEMBLIES

0 - 1000mm ± 1.5mm
1000 - 3000mm ±3mm
OVER 3000mm ±5mm

MODIFICATION	GRID REF.	MOD No	DRAWN BY:	CHECKED BY:	DATE	ISSUE
New Drawing - First Issue			AMH		14-01-2015	1

DO NOT SCALE
If unsure - Please ask

É **Promatic International Ltd.**
Station Works, Hooton Road
Hooton, South Wirral. CH66 7NF
Tel: +44 (0)151-327-2220

TITLE: SIGNATURE SKEET TRAP INSTALLATION

MATERIAL:

FINISH:

SCALE:	WEIGHT:	DRG No.	SHEET 2 OF 3
1:150	Kg	LAYOUT/SIGSK	

É Promatic International Ltd. This drawing is confidential and is supplied on condition that it is not used for any purpose other than that for which it was requested. Reproduction or communication of its content is prohibited without written authority from Promatic International Ltd.

ProM_A3L

A3 DIMENSIONS IN MILLIMETRES UNLESS OTHERWISE STATED.

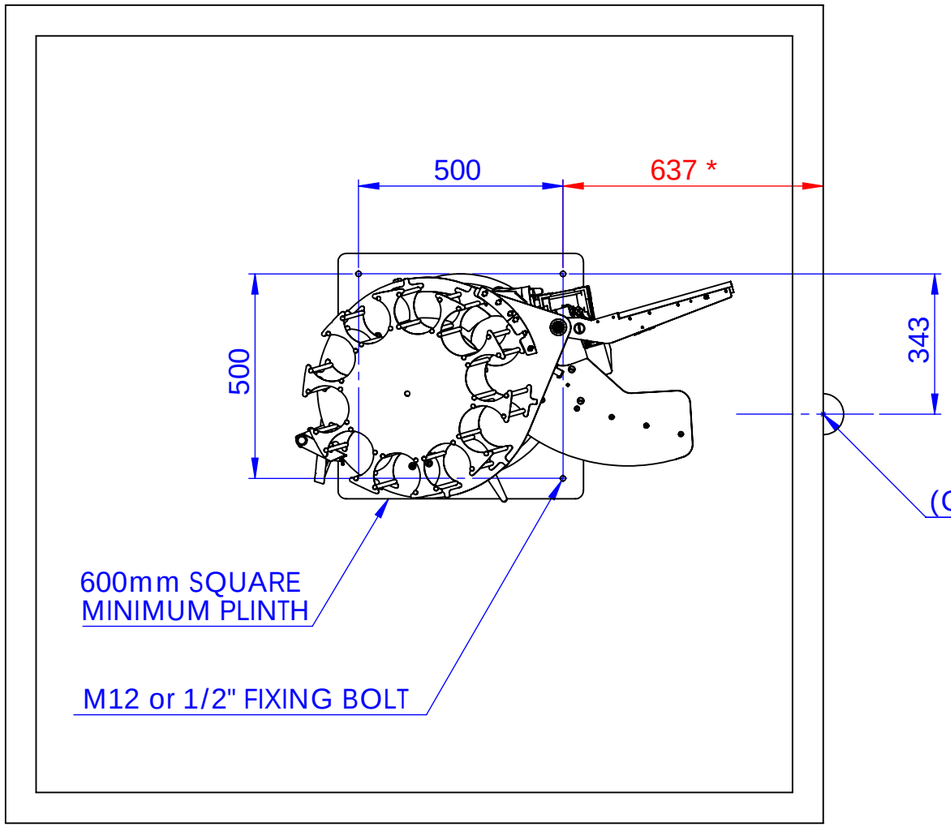

HIGH HOUSE

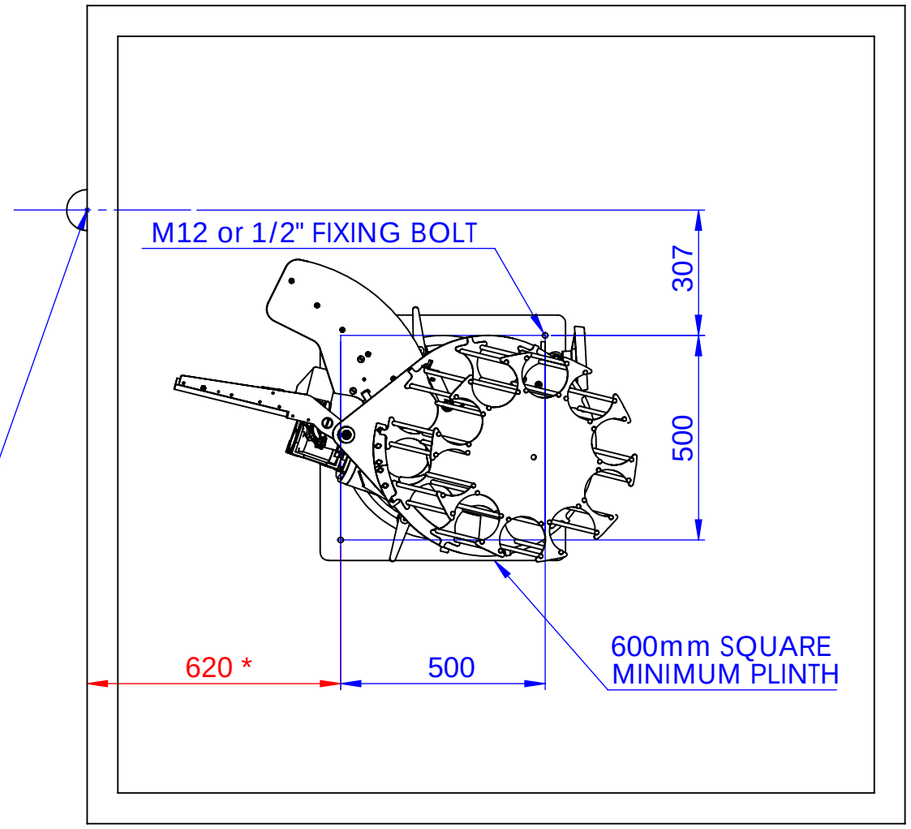

LOW HOUSE

DIMENSION REFERS TO OUTSIDE OF TRAPHOUSE (CLAY EXIT POINT)
WALL THICKNESS (MEASURED AT AT BENCH HEIGHT) MUST BE DEDUCTED
BENCH / PLINTH HEIGHTS SHOWN ON SHEET 1

TOLERANCES (UNLESS OTHERWISE STATED)

MACHINED DETAILS

LINEAR DIMENSIONS: ± 0.5mm
EXTERNAL DIAMETERS: +0 -0.5mm
HOLES:

UP TO 10mm: +0.2mm -0
OVER ∅10 TO ∅30mm: +0.5mm -0
OVER ∅30: +1.0mm -0

ANGLES ±0.5°
SURFACE FINISH Ra 6.3εm

NON-MACHINED DETAILS

0 - 1000mm ± 1.0mm
1000 - 3000mm ±1.5mm
OVER 3000mm ±3mm

FABRICATED ASSEMBLIES

0 - 1000mm ± 1.5mm
1000 - 3000mm ±3mm
OVER 3000mm ±5mm

MODIFICATION	GRID REF.	MOD No	DRAWN BY:	CHECKED BY:	DATE	ISSUE
New Drawing - First Issue			S.D.S		20-02-2015	1

DO NOT SCALE
If unsure - Please ask

É **Promatic International Ltd.**
Station Works, Hooton Road
Hooton, South Wirral. CH66 7NF
Tel: +44 (0)151-327-2220

TITLE: SIGNATURE SKEET TRAP INSTALLATION

MATERIAL: BASE DRILLING DIMENSIONS FOR TRAP HOUSES

FINISH:

SCALE:	WEIGHT:	DRG No.	SHEET 3 OF 3
1:150	Kg	LAYOUT/SIGSK	

É Promatic International Ltd. This drawing is confidential and is supplied on condition that it is not used for any purpose other than that for which it was requested. Reproduction or communication of its content is prohibited without written authority from Promatic International Ltd.

ProM_A3L